Yaantrika Newsletter

Department of Mechanical Engineering

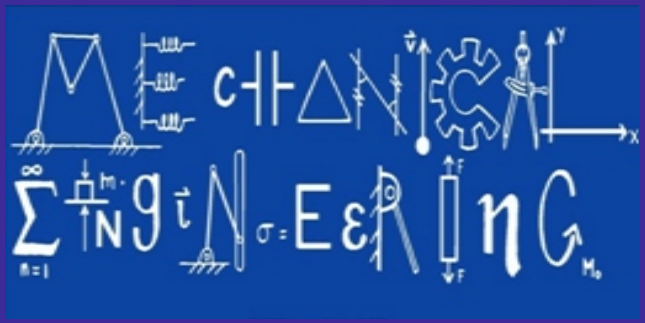

Volume 4 | Issue 2 | June - 2019

Vision and Mission of the Institute

Vision

- To be one of the premier Institutes of Engineering and Management education in the country

Mission

- To provide Engineering and Management education that meets the needs of human resources in the country
- To develop leadership qualities, team spirit and concern for environment in students

Objectives

- To achieve educational goals as stated in the vision through the mission statements which depicts the distinctive characteristics of the Institution.
- To make teaching-learning process an enjoyable pursuit for the students and teachers.

Vision and Mission of the Department

Vision

- To be a premier department for education in Mechanical Engineering in the state of Karnataka, moulding students into Professional Engineers

Mission

- To provide teaching - learning process that prepares engineers to meet the needs of industry and higher learning
- To provide environment for self-learning to meet the challenges of changing technology and inculcate team spirit and leadership qualities to succeed in professional career
- To instill professional ethics and concern for environment for the benefit of society

Program Educational Objectives (PEOs):

After 2/3 years of graduation, the students will have the ability to:

- Apply principles of mathematics, science and Mechanical Engineering to design Mechanical Systems and Applications in Industry
- Apply knowledge of Mechanical engineering to solve problems of social relevance with concern for environment
- Work with professional ethics as individuals and as team members in multi disciplinary projects demonstrating creativity and leadership
- Pursue higher education and research in advanced technology

This edition of Yaantrika from the Department of Mechanical Engineering is dedicated to the German engine designer Karl Friedrich Benz. His Benz Patent Motorcar from 1885 is considered as the first practical automobile. He received a patent for the motorcar on 29 January 1886.

What's inside……..!

B. N. M. Institute of Technology

(Approved by AICTE, Affiliated to VTU, Accredited as grade A Institution by NAAC

All UG branches - CSE, ECE, EEE, ISE & Mech.E Accredited by NBA for academic years 2018-19 to 2020-21 & valid upto 30.06.2021)

Post box No. 7087, 27th Cross, 12th Main, Banashankari II Stage, Bengaluru-560070, INDIA

Ph: 91-80- 26711780/81/82 Email: principal@bnmit.in, www. bnmit.org

Vidyayāmruthamashnuthe

EDITOR'S DESK

Dear Readers,

Welcome to the June 2019 issue of 'Yaantrika'

The team of Yaantrika, wishes to give our readers an intellectually stimulating news letter. Our endeavor is to reflect the values and the quality of our esteemed Institution.
The present edition of Newsletter focuses on the activities/achievements of the department for past six months along with some interesting articles from our students.

We would like to appreciate all the students who contributed the articles for the issue. It is the willingness to put effort, share knowledge, concerns and special insights that have made this issue possible.

Knowledge is a treasure which appreciates when we share and depreciates when accumulated. Never stop sharing knowledge and helping others. Wishing the readers a happy reading.

Editorial Team

"Department of Mechanical Engineering has been accredited by National Board of Accreditation (NBA) for academic years 2018 - 19 to 2020 - 21 and valid upto 30.06.2021"

ABOUT MECHANICAL ENGINEERING DEPARTMENT

Department of Mechanical Engineering started in the Year 2011-12 with an intake of sixty students. The department offers undergraduate program in Mechanical Engineering. All the laboratories have been established procuring state of the art equipments. The department has a team of talented and well qualified members of staff, with a blend of industrial and academic experience. Faculty members with Master's and Doctorate degree qualification having specialization in Machine Design, Thermal and Manufacturing Engineering are rendering their yeoman services to academics. The department has a R&D centre under VTU. Numerous research activities have been planned through the R&D centre.

BNMIT-Toyota Centre of Excellence was inaugurated on 14th May 2018. It is the state of the art lab equipped with cut section model of engine and transmission assembly along with clutch plate and differential gear box. The centre has been provided with separate engine and transmission systems which can be assembled and dismantled completely. From academics point of view, this type of exposure to the students of Mechanical Engineering plays vital role in their understanding of majority of core subjects by correlating the theoretical aspects of learning with hands-on sessions on the machines at the centre.

CERAMIC SPEED DRIVE TRAINS

When the world is inclining towards pollution-less driving and fitness driving, most of the people are opting cycling. It not only optimises the brain but also helps in overall development of a person. While this is the case, people are going for up-gradation of riding. It is possible by reducing the weight of the cycle, improving aerodynamics of the cycle, much efficient gear shifting with improvised sprocket and derailleur system. What if we combine all these? While the leading brands are trying to improvise these factors, one of the leading brands Ceramic speeds has introduced the concept of ceramic drive trains called Driven.

Almost all the bicycles currently are driven using a multispeed sprocket, a chain and derailleur etc. The fastest system in use is the OSPW (Over Sized Pulley Wheel) System and UFO (Ultra Fast Optimisation) system. Driven built with the same technology offering unparalleled results that achieve up to 98.37% efficiency.

'Driven' sets a new benchmark in drive train technology. It increases optimal efficiency to 99% and creates 49% less friction than market leaders. Unlike traditional drive train systems, Driven eliminates friction, caused by articulation of a chain due to its innovative pinion drive shaft design. Chain-drive efficiency is limited by cross-chaining, 8 points of sliding friction as each chain link engages and disengages when the chain zigzags through the drive train and the rotating pulley wheels. In order to achieve ultimate efficiency, Driven utilises 21 Ceramic Speed hybrid bearings. Each bearing contains unique ceramic balls that are 58% lighter and 2.3 times harder than traditional steel, increasing the speed of the bearing by 30-50%. Each bearing works in harmony to deliver greater power, playing a pivotal role in performance and speed. The pinion drive shaft system eliminates 8 points of chain-sliding friction and replaces it with just 2 points of higher efficiency bearing rolling friction.

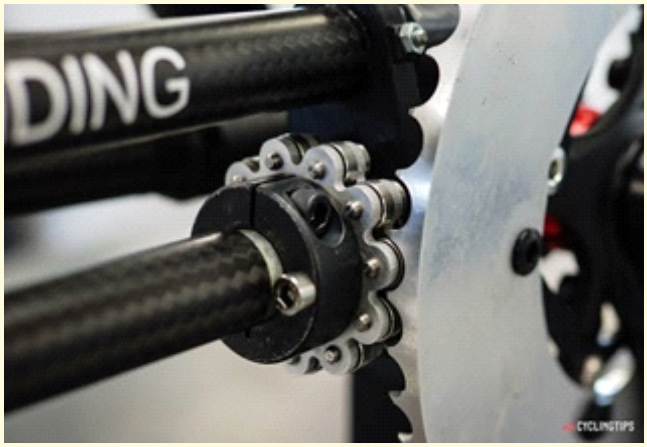

Two point contact transmission

<u>Cog Design</u>: The initial tooth profile was adapted from a linear simulation of rolling pinion bearings. The tooth profile development focused on pitch, the profile and tooth thickness. Through numerous iterations of the cog design, energy loss has been improved by more than 50% between designs. Gear changing is done by moving the rear pinions forward and backward electronically controlled and inverting the faces of the rear pinion will give various speeds based on various kinds of drives.

Results: The test results have been measured up to 100 Watts output and extrapolated to 500 Watts after a pattern took shape. In the graph, one can see the difference between Driven, a Ceramic Speed optimised drive train and the standard DuraAce drive train. The chain-drives have been calculated for real life applications, taking into consideration the cross-chaining effect. Thanks to the lack of chain in the Driven setup, the cross-chaining effect and all the sliding friction that has eliminated. At 250W, Driven creates 32% less friction than Ceramic Speed upgraded drive train, and 49% less friction than standard Dura-Ace drive train. At higher rider output, the Ceramic Speed upgraded drive train calculates a 98.5% efficient drive train, where Driven results into 99+% efficiency.

Other Advantages:

- Driven is lighter than a conventional drive train as the chain and derailleurs are eliminated.
- There is a higher potential for aerodynamic advantages.
- Endless possibilities for gear range operations of a 1x gear.
- Different diameter front and rear pinions can be used to increase or decrease the overall final drive ratios.
- The prototype contains a 13-speed rear cog, yet additional gears could be easily added.

VIGNESH NANDAVAR
IV Semester

PRATT AND WHITNEY ENGINE

The Pratt and Whitney engine is a high bypass geared turbofan engine family, currently selected as the exclusive engine for the Airbus A220, Mitsubishi regional jet (MRJ) and Embraer's second generation E jets. The PW1000G engine first entered commercial use in January 2016 with Lufthansa's first commercial Airbus a320neo flight.

The idea of a geared turbofan engine centres is on the principle of a bypass ratio. The bypass ratio is the proportion of air that goes past or around the core versus the amount that goes through iti.e.a bypass ratio of 9:1 implies that 9 kg of air passes through the bypass duct for every 1 kg of air passing through the core. Generally speaking, a higher bypass ratio means quieter, more efficient and more powerful engines.

The core of turbofan engines comprises compressors and combustion chambers. A fan at the front of the power plant, driven by the core directs air through the bypass compartments around the core of the engine, giving a bypass ratio of 9:1.

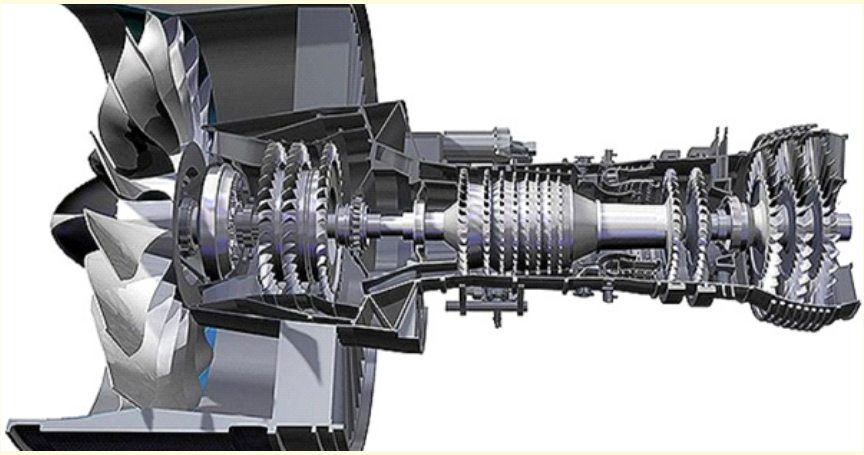

Model of Pratt and Whitney Engine

In order to increase the bypass ratio, engine manufactures have to increase the length of its fan blades. However, if elongated enough, the speed achieved at the tip of the blades will be so fast that it generates unwanted vibrations.

The PW1000G architecture comprises one fan upstream, followed by a reduction gearbox that allows the low pressure compressors to run faster than the fan, two low pressure compressor stage (to keep high pressure compressor running) and 3 low pressure turbines that keep the low pressure compressors and fan running.

The reduction gearbox is a planetary gear system, with the low-pressure shaft driving a sun gear and five planetary gears enmeshed between the sun gear and a ring gear which is not rotating relative to the engine Nacelle.

This allows this geared turbofan engine to a have a bypass ratio of 12:1 which is the highest ever achieved so far.

The PW1000G series of engines, especially the PW1100G family, are expected to be disruptive implementations, by employing the largest bypass ratio in the history of turbofan engines, adopting a geared turbofan engine design of scales hitherto unmatched, promising double digit fuel burn savings. The slow speed of the fans, contribute to low noise, promising an enhanced passenger experienced, and reduced flight-related fatigue.

Parameter	IAE V2527-A5	CFM56-5B4	PW1127G
Aircraft	Airbus A320-232	Airbus A320-214	Airbus A320NEO
Thrust	26,600 lbs (118.3kN)	27,000 lbs (120.1kN)	27,000lbs (120.1kN)
Bypass Ratio	4.8 : 1	5.7 : 1	12 : 1
Architecture (Stage Count)	1-4-10-2-5	1-4-9-1-4	1-G-3-8-2-3
Fan Diameter	63.5 inches (1613 mm)	68.3 inches (1735 mm)	81 inches (2057 mm)
Overall Length	3201 mm	2600 mm	3800mm (estimated)*
High Pressure Spool RPM (N2)	14,950	15,183	18,000 – 20,000 (estimated)*
Low Pressure Spool RPM (N1)	5,650	5200	10,500 (estimated)*
Fan RPM	5,650	5200	3,500 (estimated)*
Overall Pressure Ratio	27.2	32.6	Unknown**
Engine Weight	2400 kg	2500 kg	Unknown**

Estimated by The Flying Engineer, for informative purposes only. Do not rely or quote estimated data. *,This field shall be updated when official data is available.*

VISHAK M. ATHREYA
VI Semester

ANTIMATTER

Antimatter is equal and opposite to matter. It is a matter made of antiparticles. For every fundamental particle, there corresponds an antiparticle of opposite charge and otherwise identical properties but some neutral particles are their own antiparticles. The term antimatter was first used by Arthur Schuster in 1898. These facts have been known for some time. The first hint of them came when Dirac's “Hole Theory” of the relativistic electron predicted the existence of the positron. These positrons and antiprotons have an opposite electric charge compared to the normal electrons and protons. Their quantum numbers are positron (1) and antiproton (-1).If antimatter and matter were to collide, the quantum numbers would add to zero. The matter and antimatter would annihilate. The Antimatter does exist in our environment. Radiation and fusion processes in the sun produce positrons. The antimatter particles don't last long at all. As soon as a positron meets an electron, it annihilates.

Recent work has found that antimatter is created naturally above storm clouds, providing the first means by which the substance is produced naturally on Earth. Usually, antimatter is generated artificially in labs, using high energy particle collisions. Otherwise, it takes massive amount of heat and energy to create antimatter such as supernovae and main sequence stars. Antimatter can be trapped and even created in particle accelerator labs. In Europe, CERN (European Organization for Nuclear Research), a particle accelerator lab trapped and stored antimatter for weeks at a time. With today's technology, antimatter is being considered for medical and rocket propulsion purposes. NASA is exploring ways to use antimatter to propel future spacecraft. A Penn State artist drew this design for an antimatter propelled spaceship. High Energy Antimatter Telescope (HEAT) is another use of antimatter.

This project is a NASA program that uses a high-altitude balloon-borne experiment to study antimatter. The telescope is configured to detect high-energy primary electrons and the positrons. Antimatter is currently being used for medical purposes also. The Positron Emissions Tomography (PET), helps to identify different diseases by the use of antimatter. It is a valuable technique for some diseases and disorders because it is possible to target the radio-chemicals used for particular bodily functions such as Oncology, Neurology, Cardiology, Atherosclerosis, Neuropsychology, Cognitive Neuroscience and Pharmacology.

Antimatter is one of the costliest materials in this world. In 2006, Gerald Smith estimated 250 million dollars could produce 10 milligrams of positrons (equivalent to $25 billion per gram). In 1999, NASA gave a figure of $62.5 trillion per gram of anti hydrogen. According to CERN, it has cost a few hundred million Swiss Francs to produce about 1 billionth of a gram. Matter comes in contact with antimatter. They annihilate each other. This annihilation creates very large amounts of energy. Energy Produced = 9 x 1016 J/Kg. This energy has the highest energy density of all known propellants. This is Ten billion times more energy than hydrogen/oxygen and 300 times the fusion reaction in the core of Sun. Antiparticles will annihilate on the contact with the walls of the container. The annihilation is the complete conversion of matter into energy, rather than just the part conversion that occurs in fission and fusion. Antimatter in the form of charged particle can be stored in vacuum that contains the combination of electric and magnetic field. Dipole moments are induced on neutral molecules and so are trapped by magnetic fields in vacuum.

There is technology available to create antimatter through the use of high-energy particle colliders. They are also called "Atom Smashers." Atom Smashers, like CERN are large tunnels, lined with powerful super magnets that circle around to propel atoms nearly at light speed. When an atom is sent through this accelerator, it slams into a target, creating particles. Some of these particles are antiparticles that are separated out by the magnetic field. These high-energy particle accelerators only produce one or two picograms of antiprotons each year. A picogram is a trillionth of a gram. All the antiprotons, produced at CERN in one year would be enough to light a 100-watt electric light bulb for three seconds. Antimatter study becomes extremely important as the energy released during annihilation of matter. Antimatter can be used to meet our energy requirements. Scientists in famous research facilities are working on to make an effective way to use energy, released through annihilation for various purposes. It is also a safe facility to store antimatter in considerable quantities so that it can be used.

CHIRANJEEVI. N
VI Semester

WHAT ARE WINGLETS? HOW DO THEY HELP IN REDUCING THE FUEL CONSUMPTION TO THE AIRLINES?

One of the most noticeable features of aircraft is the variety in their wingtip shapes. Wingtips come in all shapes and sizes but what important role does this wingtip play when it comes to aerodynamics.

Wingtips offer fundamental improvement in efficiency and handling. A large number of Wingtips are available. Here in this article we shall be focusing only on certain types of Winglets.

What are Winglets? Winglets are vertical extension at Wingtips. They are of different types- Blended, Raked, Shark lets, Upswept, Spiroid and Wing fence. These Winglets help in reducing the lift induced drag and provide better lift to the aircraft. These Winglets are end vortex generators.

One of the most commonly used Winglets in commercial aircraft is the Raked Winglets. This type of Winglets forms the part of Boeing 777, 787, 767 aircrafts. The Raked Wingtip is a very efficient means to increase the effective aspect ratio (Aspect ratio is the ratio of span to chord length). Its primary drawback is that it comes at the cost of increased wingspan and wing bending moments. The Wingspan increase may spurparking and hangar space challenges, whereas the increase in bending moments will raise the air frame weight.

It is an advantage that the device does not increase parasitic interference drag (Parasitic Drag is the combination of form drag and skin friction drag), although it will increase skin friction if it is an addition to an existing wing baseline. An example of a Raked wingtip is shown on the Boeing 777 commercial transport aircraft. Such wingtips have also been used on the Boeing 767 and 787 Dream Liner Aircraft. Contrary to the popular belief, Raked wingtips have a long history, having been first evaluated in 1921 in NACATN. Both positive (forward sweep) and negative (aft sweep) rakes were studied and it was found that the maximum lift to drag ratio at an angle of attack of 4was increased by 7%.

Interestingly, the best result was that of a 20° positive rake. The report concluded, "The effects of rake on the lift and drag are so small that considerations of strength and aileron efficiency should govern the wingtip form." This interesting conclusion highlights the difference in the airplane designs of the 1920s and 2010s. This leads to 7% substantial fuel saving, which is a problem in 21st century.

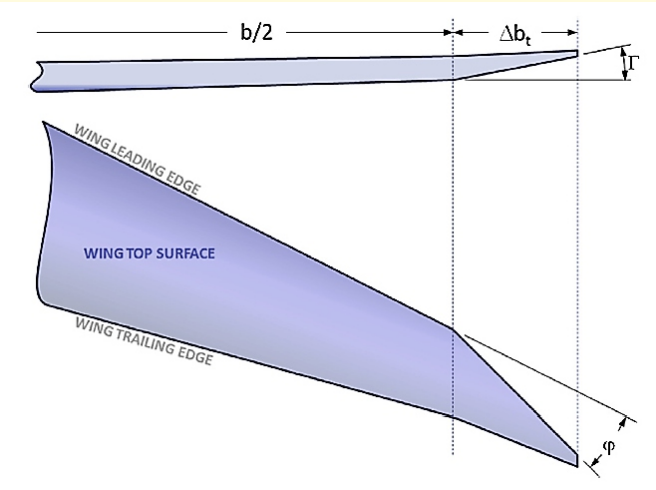

Fig.1 : Simple Geometry of Raked Winglet

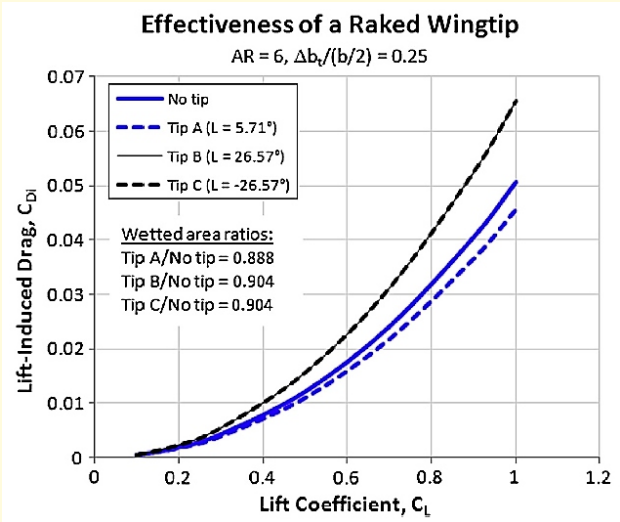

Fig.2 : An example of a Raked Wingtip shows that a low dihedral decreases lift induced drag, while a larger dihedral increases it.

Fig.3: A Boeing 777 Emirates Airlines - commercial aircraft having Raked Wingtips.

Fig.4 : Vortex Formation at Wingtips

OMKAR N. KASHYAP
IV Semester

DEPARTMENTAL ACTIVITIES

Mr. Guru Sharan B.S, Founder and CEO, Path finder NRI, Bengaluru delivering a lecture on "Future Trends and Technology" during FCD function held on 4th May 2019 under the banner of ISTE Student chapter- BNMIT

Sri. Srinivasan V. Iyengar conducting workshop on Geometric Dimensioning and Tolerancing (GD&T) held on 22nd & 23rd April 2019 under the banner of Institution of Engineers (India) Students' Chapter under Mechanical Division

Signing of MoU with M/S Fenfe Metallurgicals (L-R) Dr. B. S. Anil Kumar, Professor, ME, Sri.Tejas B. Ravindra, Research Engineer, Fenfe Metallurgicals, Dr. H. Sundara Murthy, Managing Director, Fenfe Metallurgicals, Prof. Eishwar N. Maanay, Dean-Administration, Dr. Krishnamurthy G.N., Principal, Dr. Mukesh Patil, HoD, ME and Prof. C. R. Panduranga Gupta, Vice-Principal on 23rd May, 2019

INDUSTRIAL VISITS

Students of VI semester and Faculty members visited M/s Rinac India Limited, Pvt.Ltd., Thavakere, Magadi road, Bengaluru on May 11, 2019 which is a Pioneer Company for manufacturing Refrigeration units.

Students of IV semester and Faculty members visited M/s Dairy Day Ice-Cream Pvt. Ltd., Harohalli Industrial area, Kanakapura road, Bengaluru on March 15, 2019

Students of IV semester and Faculty members visited Karnataka Cooperative Milk Producers' Federation (KMF), Bengaluru on May 2, 2019

Students of VI semester and Faculty members visited M/s MTR Food Pvt. Ltd., Bommasandra Industrial area, Bengaluru from May 8-9, 2019

FACULTY ACHIEVEMENTS

- Dr. B. S Anil Kumar delivered a lecture on 'Student Empowerment in the Field of Education (Non-Technical) and Engineering Graphics (Technical)' on 8th March 2019 at Amruta Institute of Engineering Management Sciences and Polytechnic, Bangalore.

- Dr. Saravanan.V delivered a lecture on the topic titled "Introduction to Computational Fluid Dynamics" at National Design and Research Forum, Bangalore.

- Dr. Saravanan.V undertook consultant work on "Design of Axial Flow Pump for Marine Application" at National Design and Research Forum.

- Mr. H.S Kumaswamy published a paper on "Influence of Boron Fiber Powder and Graphite Reinforcements on Physical and Mechanical Properties of Aluminium 2024 Alloy Fabricated by Stir Casting" in Journal of Minerals and Materials Characterization and Engineering, Volume 7, pp 103-116, April 2019.

- Mr. Hemanth Kumar. C guided Karnataka State Council for Science and Technology (KSCST) funded project titled "Development of Bio Degradable Diaper for Hygiene Applications" for VIII (2015-16 batch) Semester students.

- Dr. B. S Anil Kumar successfully completed the NPTEL Online Course titled 'Introduction to Fluid Mechanics' with Elite grade.

- Dr. D. Shivalingappa successfully completed the NPTEL Online Course titled 'Finite Element Analysis' with Class Gold Topper.

- Dr. Raghanendra. N successfully completed the NPTEL Online Course titled 'Product Design and Development' with Class Gold Topper.

- Dr. Saravanan.V successfully completed the NPTEL Online Course titled 'Heat Transfer' with Elite grade.

- Mr. Hemanth Kumar. C successfully completed the NPTEL Online Course titled 'Product Design and Development' with Class Gold Topper.

- Mr. Karthik S.R successfully completed the NPTEL Online Course titled 'Waste to Energy' with Elite grade.

- Mr. Vishnu.P successfully completed the NPTEL Online Course 'Friction and Wear of Materials'.

- Mr. Sandeep. K successfully completed the NPTEL Online Course titled 'Waste to Energy'.

- Mr. Veeresh. B successfully completed the NPTEL Online Course titled 'Teaching and Learning in Engineering'.

STUDENTS' ACHIEVEMENTS

- Nagpoojith (2015-2019 batch student) received the best Outgoing Student Award of the year, 2019.
- Nagpoojith of 8th Sem was awarded the "Chess Ambassador" for the 2019 batch.
- Nagpoojith, Someshwar, Piyush G and Adithya Shenoy of 8th Sem was selected for the Grand Finale of Manthan Buisness Competition at Federation of Karnataka Chambers of Commerce & Industry (FKCCI), Bangalore.
- Samarth R Hegde and Akshar K R of 6th Sem presented technical paper "AGROTONA" and won the best paper award at National Conference on "Recent Innovations in Engineering Science, Technology and Management" held at AITD, Goa on 24th & 25th January 2019.
- Sudeep S Rao of 8th Sem presented a paper on "Design of Low Resource 3- way Actuated Medical Laboratory Centrifuge System for Blood Pathology Tests" in International Conference on Communication System and Network held at Chancery Pavilion, Bangalore on 11th January 2019
- Manoj.G of 8th Sem presented a paper on "Emerging Trends in Material Design and Manufacturing - 2019" in National Conference held at JSSATE , Bangalore on 17th May 2019.
- Nataraj Badiger of 8th Sem won the first prize in the State Level Technical Project Exhibition held at Sri Venkateshwara College of Engineering organized by Karnataka Science and Technology Academy (KSTA) on 12th & 13th March 2019.
- Naren P and Likith of 4th Sem won the award for 'Jarvis 1.0 Project' at Department Level in the IPL winter competition.
- Vignesh Nandavar of 4th Sem won the first prize at the National Level "Pravega Photography Contest - 2019" held at Bangalore on 13th January 2019.
- Vignesh Nandavar of 4th Sem won the first prize at the National Level "Udvikas Online Photography Contest" held on 2nd March 2019.
- Achutha A R, Chiranjeevi N, Daniel Mathew and Gautham of 6th Sem won the Best Project Award at Department Level in the IPL Winter Competition for 'Thermo Electric Cooler' Project.

EDITORIAL TEAM

FACULTY

Manu A S
Asst. Professor

R. N. Tiwari
Asst. Professor - English

STUDENTS

Vighnesh Nandavar	IV Sem
Omkar N. Kashyap	IV Sem
Chiranjeevi. N	VI Sem
Vishak M. Athreya	VI Sem

LAYOUT & DESIGN

Sri. Meiyappa B
Institutional Photographer

For your kind suggestions & advice, kindly email to: manuas@bnmit.in