Volume 6 Issue 1 December - 2020

Yaantrika Newsletter

Department of Mechanical Engineering

Vision and Mission of the Institute

Vision

- To be one of the premier institutes of Engineering and Management Education in the country.

Mission

- To provide Engineering and Management Education that meets the needs of human resources in the country.
- To develop leadership qualities, team spirit and concern for environment in students.

Objectives

- To achieve educational goals as stated in the vision through mission statements which depicts the distinctive characteristics of the institution.
- To make teaching-learning process an enjoyable pursuit for the students and teachers.

Vision and Mission of the Department

Vision

- To be premier department for education in Mechanical Engineering in the state of Karnataka, moulding students into professional engineers.

Mission

- To provide teaching-learning process that prepares engineers to meet the needs of industry and higher learning.
- To provide environment for self-learning to meet the challenges of changing technology and inculcate team spirit and leadership qualities to succeed in professional career.
- To instil professional ethics and concern for environment for the benefit of society.

Program Educational Objectives (PEOs)

After 2/3 years of graduation, students will have the ability to:

- Apply principles of Mathematics, Science and Mechanical engineering to design mechanical systems and applications in industry.
- Apply knowledge of Mechanical Engineering to solve problems of social relevance with concern for environment.
- Work with professional ethics as individuals and as team members in multi disciplinary projects demonstrating creativity and leadership.
- Pursue higher education and research in advanced technology.

This edition of Yaantrika from the Department of Mechanical Engineering is dedicated to ***Padma Vibhushan Satish Dhawan*** who was an Indian mathematician and aerospace engineer, widely regarded as the father of experimental fluid dynamics research in India.

What's Inside.....

- Technical Articles
- Faculty Achievements
- Student Achievements
- Departmental Activities

B. N. M. Institute of Technology

(Approved by AICTE, Affiliated to VTU, Accredited as grade A institution by NAAC)

All UG branches - CSE, ECE, EEE, ISE & Mech.Engg. Accredited by NBA for academic years 2018-19 to 2020-21 & valid upto 30.06.2020

Post box No. 7087, 27th Cross, 12th Main, Banashankari II Stage, Bengaluru – 560070, INDIA

Ph: 91-80-26711780/81/82 Email: principal@bnmit.in, www.bnmit.org

Editor's Desk

Dear Readers,

Welcome to the June 2020 Issue of 'Yaantrika'

The team of Yaantrika, wishes to give our readers an intellectually stimulating news letter. Our endeavour is to reflect the values and the quality of our esteemed institution.

The present edition of Newsletter focuses on the activities/achievements of the Department for the past six months along with some interesting articles from our students. We would like to appreciate all the students who contributed the articles for this issue. It is the willingness to put efforts, share knowledge, concerns and special insights that have made this issue possible. Knowledge is a treasure that appreciates when we share and depreciate when accumulated. So, never stop sharing knowledge and helping others.

Wishing the readers, a happy reading.

Editorial Team

'The Department of Mechanical Engineering has been accredited by the National Board of Accreditation (NBA) for the Academic Years 2018 - 19 to 2020 - 21 and valid upto 30.06.2021'

ABOUT MECHANICAL ENGINEERING DEPARTMENT

The Department of Mechanical Engineering started during the session 2011-12 with an intake of sixty students. The Department offers undergraduate program in Mechanical Engineering. All the laboratories have been established procuring state of the art equipment. The Department has a team of dedicated and well qualified faculty members, with a blend of rich industrial and academic experience. The Faculty members with Master's and Doctorate degree, having specialization in Machine Design, Thermal and Manufacturing Engineering are rendering their yeoman services to the students. The Department has an R&D Centre recognized by Visvesvaraya Technological University, Belagavi.

The Department has established a state-of-the-art Centre of Excellence in association with Toyota Kirloskar Motor, making the institute, first in the country to have the Toyota Kirloskar Centre of Excellence. The centre has cut sections of Innova and Fortuner Car Engine Systems. The Center of Excellence also has facilities for students to experience hands-on assembly and dismantling of various engine parts.

The Department has MoUs with Toyota Kirloskar Motors Pvt. Ltd., Mahatma Gandhi Institute for Renewable Energy and Development (MGIRED) and Fenfe Metallurgicals for sustained activities in the area of automobile engineering, renewable energy and metallurgical engineering respectively.

The Department also offers 'Lathe Operator' course (Automotive Sector) under Pradhan Mantri Kaushal Vikas Yojana (PMKVY) an initiative by Automotive Skill Development Council, Ministry of Skill Development and Entrepreneurship, Government of India.

TECHNICAL ARTICLES

GeoEngineering

The world climate crisis is reaching a point of no return. Our current transition to clean energy is far too slow. Research indicates that nearly 400 years would be required to transform the energy system. It is very clear that we do not have this kind of time. Thus, drastic measures are to be taken. One such idea is geoengineering or also known as Climate Engineering. GeoEngineering is a term used for deliberate and large scale intervention in the Earth's climate system. It aims at reducing the adverse effects of global warming on a very large scale.

History: The idea of GeoEngineering is not a very new concept. In 1965, the Science Advisory Committee to the President of the USA warned that it might be necessary to increase the reflectivity of the Earth to offset rising greenhouse-gas emissions. This is an example of a type of GeoEngineering known as Solar GeoEngineering. Soviet climatologist, Mikhail Budyko is generally credited as the first to suggest that, we counteract climate change by the above method in his book from 1974. Lately, the idea gained attention when Noble Prize winning Chemist, Paul Crutzen called for Climate Engineering research in an article about climate change.

Proposed Strategy: Stratospheric Aerosol Injection: Climate Engineering or Solar GeoEngineering is the best known form. It is the injection of aerosols into the stratosphere, to absorb the Sun's radiation. This acts like a dimming effect, that traps heat in the stratosphere and therefore, reduces the temperature on the surface of the Earth. It is very important to note that this has occurred naturally. In 1991, the massive eruption of Mt. Pinatubo, in the Philippines, dispersed some 20 million tons of sulfur dioxide into the sky. By reflecting the Sun's radiation back into space, the particles in the stratosphere helped to keep global temperatures down by about 0.5 °C for the next two years.

Arguments in favour of GeoEngineering:

- Mimics a Natural Process: As stated above, it occurs naturally during volcanic eruptions, opposed by some other Climate Engineering techniques.
- Technologically very Feasible: Most of the technologies, required to implement this method are already existing with no major modifications to existing aircrafts. It is possible to inject aerosols into the stratosphere.
- Cost Effective when Compared to other Methods of GeoEngineering: Many other techniques require large amounts of money for research and development.
- Time: The important factor of all is the ability to buy is much needed time. This method may provide us with a crucial decade or two to help overcome the climate crisis.

Side Effects and Risks: The life span of aerosols is short lived. We would have to inject a very large amount for a very long time to effectively see changes. This would also change rainfall patterns that could negatively impact millions of people by causing droughts and famines. Another issue with the aerosols is the sulfur dioxide. Sulfur dioxide is known to harmfully affect the ozone layer and hence this may potentially lead to further destruction of the ozone layer.

If politicians and the industries use the limiting GeoEngineering as an excuse to continue to live the way we always live, it would pose an existential threat to humans. Humans will continue to add CO_2 to the surroundings which would end up getting absorbed by oceans. This would further rise the temperature and result in self-destruction. This already happens to a certain extent which is destroying many marine life systems, such as the coral reefs.

If humanity continues to pump the atmosphere with CO_2, and prevents the planet from heating up by blocking solar radiation, we will be sitting on a time bomb. Once we stop Geoengineering, the natural cycle will take over once again, and

Earth would start to heat up again. But after a few decades of keeping the planet artificially cold while also still releasing massive amounts of CO_2, it would heat up, much more quicker. An increase in temperature that would take 50 years as of today could happen in just 10 years. This process is known as Termination Shock. Change in temperatures at such a large extent in such less time would not give existing ecosystems enough time to adjust. This would lead to the destruction of most existing ecosystems as well as causing mass extinction.

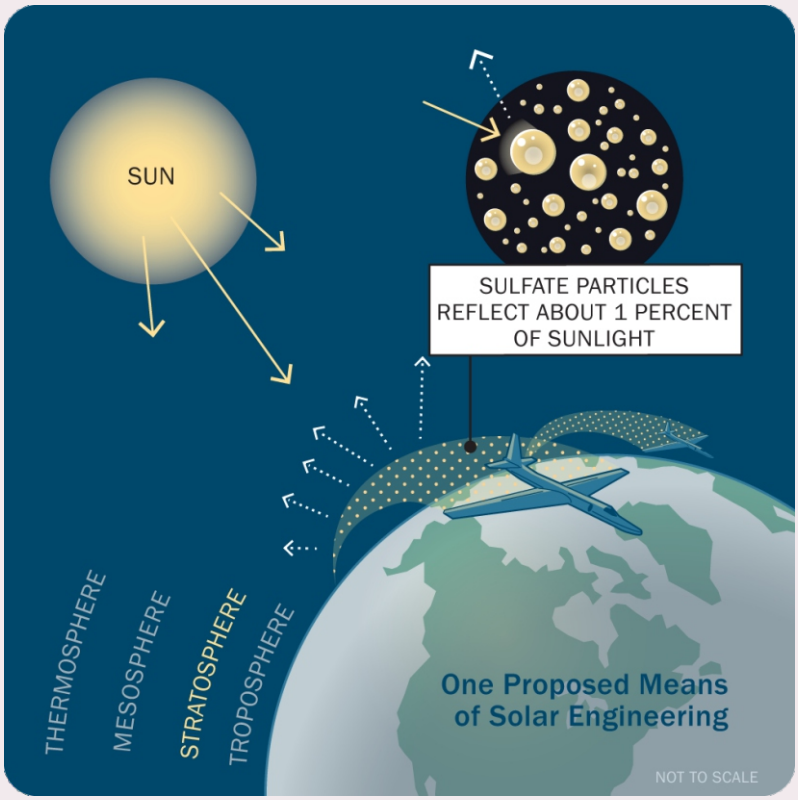

Justification: There may seem to be no reason for this method to be justifiable at all, yet there is. The time this method gives us is absolutely crucial. At the time of writing, the famous 'Climate Clock' stated an estimated amount of 7 years, 32 days and 13 hours left to save the world. Now, if we were to have an extra decade or two, it might just be enough. We would have to go completely carbon neutral and work tirelessly towards restoring the Earth. Research is being done on using aerosols that are much safer for the ozone layer. Termination shock may not be such a grave danger. In recent years, more and more studies have shown that this termination shock can be avoided by following a phase-out plan. This involves reducing the amount of sulfur dioxide over a period of years such that the climate and ecosystems can adapt to the changes. The studies emphasize that a termination shock can only be avoided in this way if carbon emissions are significantly much lower.

In conclusion, GeoEngineering is not a solution. It is just a temporary place holder to buy us crucial time. Time in which, we simply have to move towards carbon neutral or negative economies and work towards further restoring the Earth. GeoEngineering, in itself is a controversial topic. So much so that, it is deterring much needed research by pushing away scientists via its controversial nature. But the sad truth is that we are already running a GeoEngineering Experiment. An experiment to see what would happen if we keep pumping the atmosphere with 40 million tons of CO_2 every year. Hope we never have to see the results of that experiment.

References:

- What is geoengineeringand why should you care? | MIT Technology Review
- Geoengineering the climate: an overview and update (royalsocietypublishing.org)
- Climate engineering - Wikipedia
- Stratospheric aerosol injection - Wikipedia

Ruthvik Ramesh Shirolkar

1BG18ME041

A Brief Introduction to Building Aerodynamics and its Methodology

Building aerodynamics is one important branch of wind engineering which deals with study of flow around buildings, analysing the wind flow patterns, its characteristics and its effects which leads to either wind discomfort or wind danger. Some of the aerodynamically designed structures are Burj Khalifa (Dubai), Taipei 101 (Taiwan), Kingdom Centre (Saudi Arabia) , Petronas Twin tower (Kuala Lampur), Shanghai Tower (Shanghai) and Altair Building (Colombo). World Trade Centre of Bangalore is also a great example of aerodynamically strong design.

As the height of the building increases, wind load acting on it also increases. Importance of building aerodynamics are:

- Uncomfortable wind conditions, responsible for the success of new buildings.
- Life of building depends on the air flow around it.
- Preventing accidents caused due to wind discomfort.

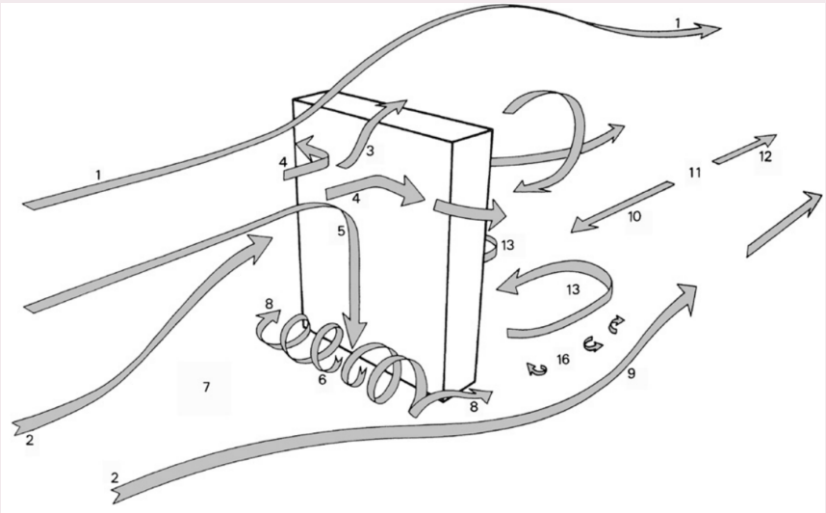

Fig. Components of air flow around a building

The wind flow around a building is categorized into various components as shown in the figure. Some of the important components are - Flow over the Building (No.1), On Coming Flow (No.2), Flow Stagnation Point (No.3), Downflow from Stagnation Point (No.5), Standing Vortex (No.6) and Corner Vortices (No.8). These components play an important role in deciding whether the wind around the building causes comfort or danger. The flow separation (No.3), usually takes at an height of 0.7H (H- height) of the building from its base. Standing vortices and corner vortices are very important deciding factor for safety of pedestrians. Depending on the speed of the wind, comfort and danger of wind is given by,

For wind comfort: $U_e = (U + \sigma_u) < 6\ m/s$

For wind danger: $U_e = (U + 3\sigma_u) > 15\ m/s$

where, U_e is the discomfort threshold wind speed, U is the mean wind speed, σ_u is the root mean square wind speed

Initially to carry out analysis, meteorological data of wind of last 15-30 years in area of the test is required. This makes it simple to determine all possible future characteristics of air flow in the test region. The wind data is then amplified. Wind amplification factor is given by :

$$\gamma = (U - U_o)/(U_o * U_{pot})$$

where, $(U - U_o)$ is the terrain related amplification factor and $(U_o * U_{pot})$ is the design related amplification.

Once the wind data is obtained, next step involves modelling of the building and the area around it (i.e surrounding buildings). This step is very important if, the area in which the building will be located is already crowded and contains a number of other buildings which can affect the wind flow. Once the building and the surrounding area are modelled, the entire system should be meshed. The quality of the mesh determines the accuracy of the results and time of compilation. Usually, building corners, regions around the building doors, window and other openings, ground around the building and the corners of other surrounding buildings are fine meshed, as the results obtained in these regions are very important.

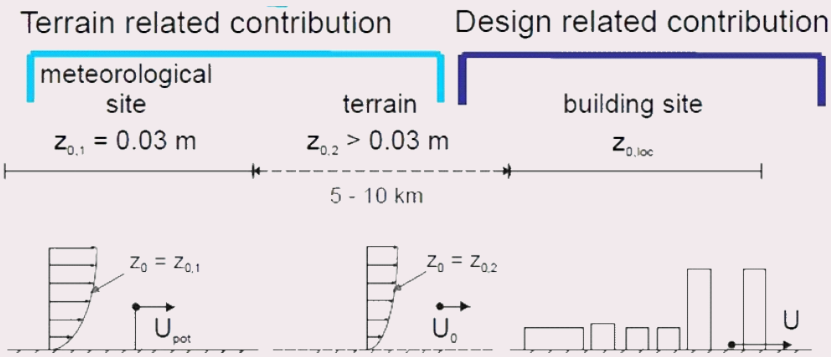

Fig. Terrain related and Design related Contribution

The scaled model is then analysed in the wind tunnel for verification of data obtained by simulation.

Some of the design features which can be used to improve the air flow around the buildings are:

1. Providing smooth edges rather than sharp edges which reduces the strength of the vortices. Eg: Taipei 101
2. Cut through the building (increasing porosity) enables the air flow to remain undisturbed. Eg: Kingdom Centre in Saudi Arabia and World Finance Centre in Shanghai
3. Including setbacks in the building. Eg: Burj Kahlifa
4. Creating twists through the height of the buildings and having each floor offset. Eg: Shanghai Tower

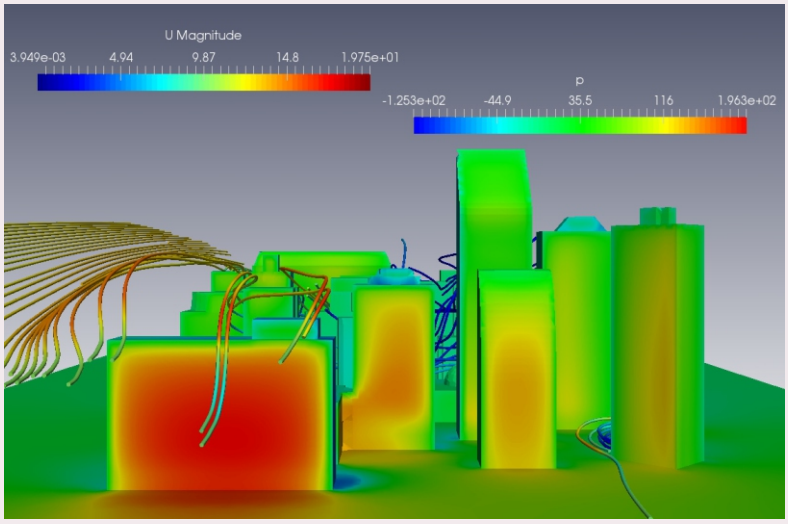

Fig. OPENFOAM Simulation of Pressure Distribution and Velocity Vectors for Flow around Buildings of a City

References:

- Hideyuki Tanaka, Yukio Tamura et.al., Aerodynamic and Flow Characteristics of Tall Buildings with Unconventional Configuration, International Journal of High Rise Building (2), 2013 (3)
- Building Aerodynamics - Optimization of Wind Induced Structural Response, Sudeesh Kala
- Building Aerodynamics, Tom Lawson, University of Bristol

Omkar N Kashyap

1BG17ME032

Intelligent Manual Transmission - iMT

For starters, what exactly is an iMT?

Simply and quite accurately put, the iMT is a 'Clutchless Manual'. Yes, at its heart it's just a regular manual gearbox but without a clutch pedal. This isn't really new as in the late '90s, Swedish car maker, Saab had designed a somewhat similar system. ***Saab 900*** featured Sensonic transmission, which provided a manual gearbox without a clutch pedal. However, it was way ahead of its time and none of them materialized. Sounds interesting, doesn't it?

How does an iMT work?

An iMT uses a Transmission Gear Shift (TGS) feature which has a lever with an Intention Sensor. When the driver touches the Intention Sensor, located on the shift lever, the Transmission Control Unit receives a signal that the driver

wishes to change gears. This engages a hydraulic actuator to actuate the clutch. A Clutch Tube manages the Concentric Slave Cylinder (CSC). The CSC uses the pressure caused by the actuator to control the clutch and pressure plate which engages and disengages the clutch. With this new IMT system, the driver can change gears without having to mechanically operate the clutch pedal.

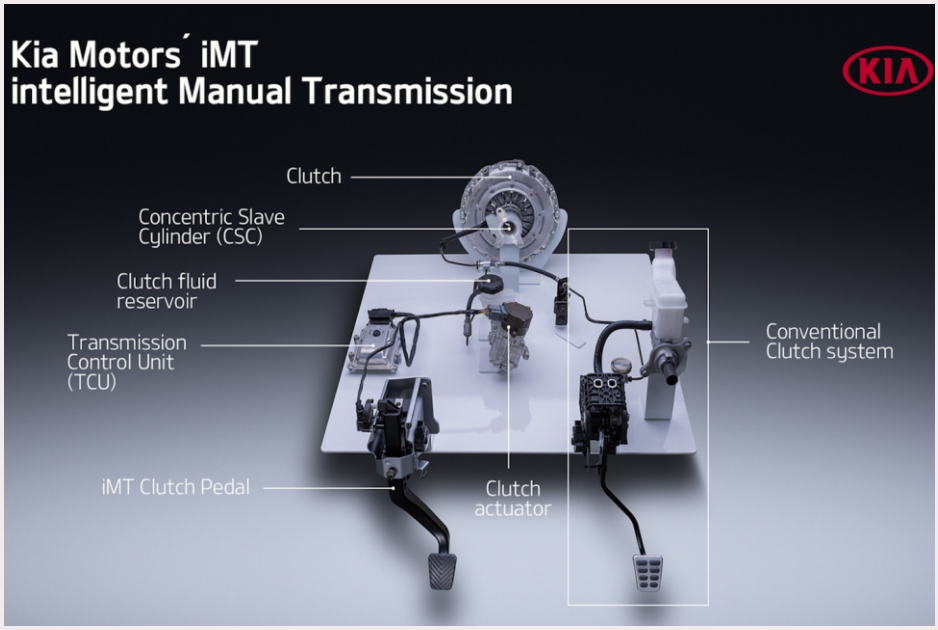

An iMT has a traditional H-pattern manual gear lever just like a manual transmission. However, it will not have a clutch pedal, although it will have the brake & accelerator pedals. This system totally eliminates the clutch pedal. The clutch less manual transmission uses various sensors to monitor the engine speed as well as the position on the gear lever and automatically engages the clutch when needed. However, it is not necessarily without the clutch mechanism itself. The clutch pedal is absent from the driver's foot well but a mechanical clutch in the drive train still exists internally. However, the only difference is that it is operated electronically instead of manually.

Advantage of iMT's:

Considering this any automatic transmission in manual mode does the same. Does an iMT even make sense? From a financial point of view, it makes immense sense as an iMT costs about Rs.20,000 more than an equivalent manual transmission variant where as traditional automatics such as torque converter or Dual Clutch Gearbox cost a whopping Rs. 1 lakh more than an equivalent manual transmission variant. Apart from being cheaper to buy, it is also cheaper to run as it is more efficient than its automatic counterpart. An iMT also provides the same driving experience as a manual barring the clutches of the clutch in traffic, hence catering to a wider audience.

Hyundai Motors is the first to introduce the iMT tech to the mass market with its compact SUV offering the Venue. Kia being the sister brand of Hyundai, closely followed by introducing iMT in its newest offering to the Indian market, the Sonet. Hyundai and Kia claim to have received a very good response for their iMT transmission.

Conclusion:

With iMT combining the best of performance, efficiency and affordability, it seems to be the next best thing of the automobile industry. Considering the excellent sales of iMT's so far, they can smash to smithereens the age old perception of automatics being unreliable, expensive and inefficient and make automatics a popular alternative to manuals.

References

www.autocarinida.com
www.carbiketech.com
https://press.kia.com/eu/en/home.html

Surya Ravishankar
1BG19ME042

FACULTY ACHIEVEMENTS

Dr. B. S. Anil Kumar was invited as an External Chair for the Research Paper Review Process during the 2nd International Conference, SURF-2020, organized by Bearys Institute of Technology, Mangalore, held between 6th and 8th August, 2020.

Dr. B. S. Anil Kumar was issued a 'Letter of Appreciation' by the Management (BNMIT) for achieving more than 90% in the self-appraisal for the academic year 2018-19 on 5th September, 2020.

Dr. P. L. Srinivasa Murthy is an invited member of Board of Examiners, constituted by Visvesvaraya Technological University, Belagavi for the Academic Year 2020-21.

Dr. P. L. Srinivasa Murthy has developed e-content (Video Lectures + Study Material) in Design of Machine Elements 1 course for e-Shikshana Programme (September - December 2020) of Visvesvaraya Technological University, Belagavi.

Dr. D. Shivalingappa has applied for an Indian Patent (Application Number:202041045934).

Mr. H. S. Kumaraswamy successfully completed his PhD defense on 18th November, 2020.

Mr. Mahendra Kumar C. has successfully completed an eight week NPTEL online course '*Metal Forming Technology*' coordinated by IIT Roorkee.

Mrs. Shwethashree B. has participated in an online course on '*Global Navigation Satellite System*' conducted by Indian Institute of Remote Sensing (IIRS), ISRO, Dehradun.

Journal and Conference Publications

Dr. D. Shivalingappa co-presented a research paper titled '*Potential use of Cenospheres in achieving desired properties of monolithic polymer materials: A Review*' in the International Conference on Advanced Light-Materials and Structures (ICALMES 2k20) held at CMRIT Hyderabad during 6th and 7th March, 2020.

Dr. D. Shivalingappa co-authored a journal paper titled, '*Utilizing the Recycled Waste Printed Circuit Board Powder in Synthetic Rubber Composite as Reinforcement – An Experimental Approach*' published by Tierärztliche Praxis, Global Research Communications, Germany, Vol. 40, 2020, Pp. 28 – 36.

Mr. Harish and **Dr. D. Shivalingappa** published a research paper titled '*The Influence of Ball and Roller Burnishing process parameters on surface Integrity of an Al 2024 Alloy*' in Elsevier Materials Today: Proceedings 27, Part 2, 2020, Pp. 1337 – 1340.

Mr. H. S. Kumaraswamy published a research paper titled, 'Dry sliding Wear Behavior of Al 2024 Boron Fiber Powder Metal Matrix Composite Fabricated by Stir Casting' in the journal, Advancement in Mechanical Engineering and Technology, 3(3), 2020, 1–16. http://doi.org/10.5281/zenodo.4278789.

Mr. Hemanth Kumar C. presented a research paper on 'Experimental Study on Cyclic Behavior of Glass Fibre Reinforced Epoxy Matrix Composite' in the International Conference on Advanced Materials Science and Applications (ICAMSA-2020) held at Ramaiah Institute of Technology, Bangalore, during 3rd and 4th September, 2020.

STUDENT ACHIEVEMENTS

Technical

Dhanush K., a student of 7th Semester, successfully completed the online course, '*Python for Everybody*' offered by Coursera - A non-credit specialization conducted by University of Michigan. This specialization requires completion of 5 courses related to Python programming language.

Omkar N. Kashyap, a student of 7th Semester, successfully completed the online course, '*Supply Chain Management*' offered by Coursera - A non-credit specialization conducted by Rutgers Business School. This specialization requires completion of 5 courses related to Supply Chain Management.

Harsha R., a student of 5th Semester, successfully completed the online course, '*Solar Energy for Engineers, Architects and Code Inspectors*' coordinated by University of Buffalo and State University of New York. This specialization requires completion of 3 courses related to Solar Energy.

Harsha R., a student of 5th Semester, successfully completed the online course, '*Google IT Support*' offered by Coursera - A non-credit Professional Certification by Google. This specialization requires completion of 5 related courses.

Rohan Ravi, a student of 7th Semester, completed the online course on '*Satellite Photogrammetry and its Application*' conducted by Indian Institute of Remote Sensing (IIRS).

Rohan Ravi, a student of 7th Semester completed the online course on, '*Engineering: Undergraduate & Masters Asia Virtual Experience Program*' offered by InsideSherpa and conducted by Microsoft.

Karthik Keshav and **Surya R.**, students of 3rd Semester, successfully completed the online course '*Programming for Everybody (Getting Started with Python)*' offered by Coursera - A non-credit course conducted by University of Michigan.

Vaidehi G. R. Maiya, a student of 5th Semester, successfully completed the online course, '*Introduction to Artificial Intelligence*' offered by NPTEL and coordinated by TCSioN Digital Hub.

Vaidehi G. R. Maiya, a student of 5th Semester, completed the online course on '*Satellite Photogrammetry and its Application*' conducted by Indian Institute of Remote Sensing (IIRS).

Confernce/Journal Publications by Students

Omkar N. Kashyap of 7th Semester won the Best Paper Award for the research paper titled, '*Study of Flow around Bio-Inspired Corrugated Airfoil at Different Angle of Attacks in Low Reynolds Number Regime*' presented during the three day Virtual International Conference on Advances in Mechanical Engineering Sciences & Management (ICAMESM-2020) organised by Dayananda Sagar College of Engineering, Bangalore.

Vignesh Nandavar of 7th Semester published a research paper titled, '*Effect of Variation of Link Lengths on the Stability of Klann Mechanism for a Quadruped Robot*' in International Research Journal of Engineering and Technology (IRJET), Vol. 7, Issue 8, August 2020.

Non-Technical

Sumukh A. Shenoy of 5th Semester won First prize in '*Photography*' competition conducted by BNMIT on the eve of Environment Day.

Vaidehi G. R. Maiya of 5th Semester won First prize in '*Video*' competition conducted by BNMIT on the eve of

Environment Day.

Gouthami Manthena of 5th Semester secured Third place in '*Western Vocal*' event of Kalabhageerathi competitions conducted by BNMIT during May, 2020.

Omkar N. Kashyap of 7th Semester secured Second place in '*Instrumental Percussion*' event of Kalabhageerathi competitions conducted by BNMIT during May, 2020.

DEPARTMENTAL ACTIVITIES

Webinar

Dr. Joel Hemanth
Director
Trinity Academy & Research Center

A webinar on '*Career Paths in Mechanical Engineering*' was organized under the banner of Institution of Engineers (India) Students' Chapter for 3rd, 5th and 7th Semester students on 12th November, 2020. The webinar was hosted on Microsoft Teams platform by Dr. Joel Hemanth, Director, Trinity Academy & Research Center.

Webinar - Connect Alumnus

Automotive Journalism

Mr. Chirag S Moro
Senior Correspondent Team BHP, Mumbai,
Automotive Journalist

3D Printing Technology

Mr. Reethan D L
Co-Founder & Director, Hycube Works Pvt.Ltd.
Bengaluru

Preparation for Higher studies

Mr. Prashanth S R
Research Scholar, VIT

AI and Mechanical Engineers

Ms. Nisha B Satheesh
Machine Learning Engineer at Dvara E-Dairy, IIT Bombay

Integrated Engineering

Mr. Harshith R
Design Engineer, Schneider Electric India Pvt. Ltd., Mysuru,

A webinar was conducted on 26th December, 2020 as a part of online student induction program for newly joined students. Alumni of the Department participated in the webinar. The webinar focussed on emerging trends and career prospects in Mechanical Engineering.

Alumni who participated in the Virtual Webinar

Online Mechanical Quiz Competition

An online technical quiz competition was organized under the banner of Institution of Engineers (India) Students' Chapter for 3rd, 5th and 7th Semester students on 4th December, 2020. The quiz was conducted on Microsoft Teams

***Dr. B. S. Anil Kumar**, HoD, Department of Mechanical Engineering, Felicitating the Winners of Quiz Competition:*
First place - Agastya Omkumar** of 7th Semester **(L)** **Second place - Rishikesh B. Kumar** of 7th Semester **(R)

Industry Institute Interface Meet

A new initiative '*Industry Institute Interface*' was undertaken with a primary focus on bridging the gap between industry and academia by improving Mechanical Engineering curriculum and to explore opportunities for collaborative Research & Development. The first meeting of the forum was held on 7th November, 2020. Parents of the students who work in reputed industries and those who are entrepreneurs were invited to be a part of the meeting. Mr. V. Sudarshan, Managing Director, Spectrum Tool Engineers Pvt. Ltd. and Dr. H. Sundara Murthy, President, Fenfe Metallurgicals participated as special invitees in the meeting. Representatives of the management (Dean, Director, Additional Director and Principal) interacted with the parents and suggestions were recorded.

Mr. Sudarshan V., Managing Director, Spectrum Tool Engineers Pvt., Ltd., Addressing the Invitee about Industry Institute Interface Cell

Mr. Ravi G. (Invitee) General Manager, Digital Machining S&E Asia, Sandvik Coromant India, sharing his views during the Industry Institute Interface Meeting

Dignitaries Unveiling the Department Newsletter 'Yaantrika' during the Industry Institute Interface Meeting. L to R (Prof. Eishwar Maanay (Dean), Dr. S. Y. Kulkarni (Additional Director), Mr. V. Sudarshan, Dr. H. Sundara Murthy, Prof. T. J. Ramamurthy (Director), Dr. Krishnamurthy G. N. (Principal))

EDITORIAL TEAM

Faculty

Karthik S. R., Assistant Professor
Dept. of Mechanical Engineering
Prof. R. N. Tiwari, Assistant Professor
Dept. of Training and Placement

Students

Karthik Keshav	III Semester
Ruthvik Ramesh Shirolkar	V Semester
Aditya Sunku	VII Semester
Agasthya Omkumar	VII Semester

For any queries and suggestions, please mail to: karthiksr@bnmit.in/ hodme@bnmit.in